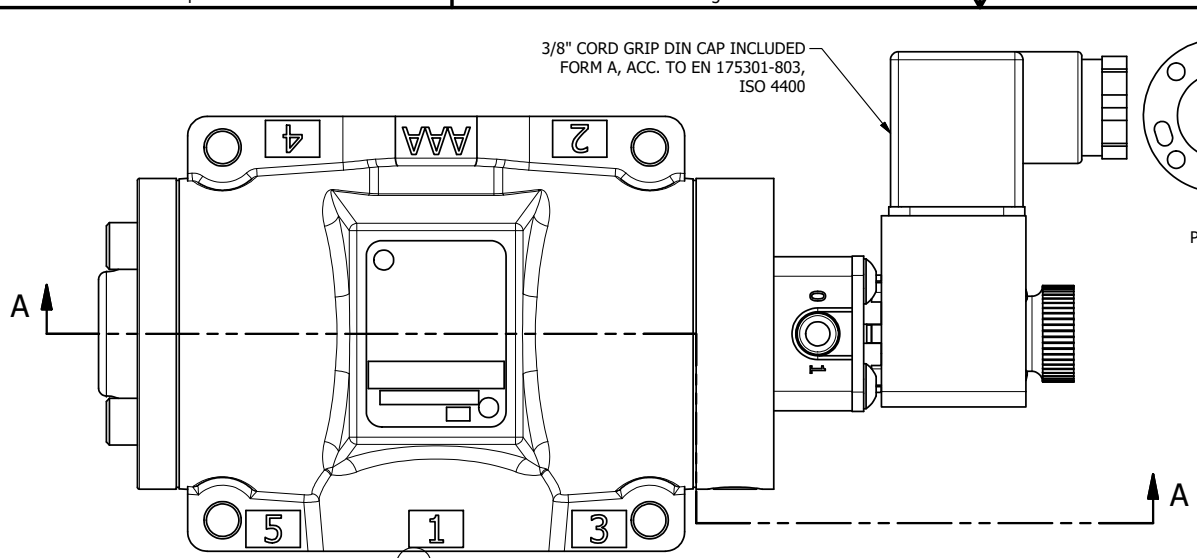

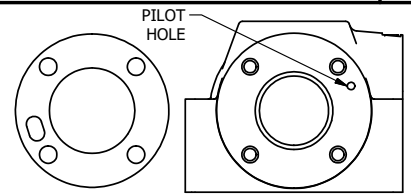

POSITION GASKET TO SEAL PILOT HOLE
SIDE 'B' ONLY.

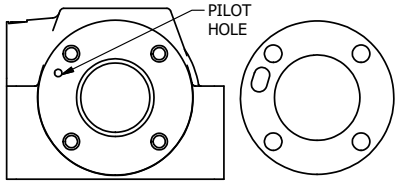

ALIGN PILOT AND HOLE IN GASKET, SIDE 'A' ONLY
FOR EXTERNAL PILOT OPERATION - ROTATE THE
ROUND ALUMINUM ADAPTOR 180 DEGREES. REMOVE
1/8" NPTF PLUG AND SUPPLY 50-150 PSI TO
1/8" NPTF PILOT PORT IN ADAPTOR.

NOTES:
1) ALWAYS GIVE VALVE MODEL AND PART NUMBER WHEN ORDERING PARTS.

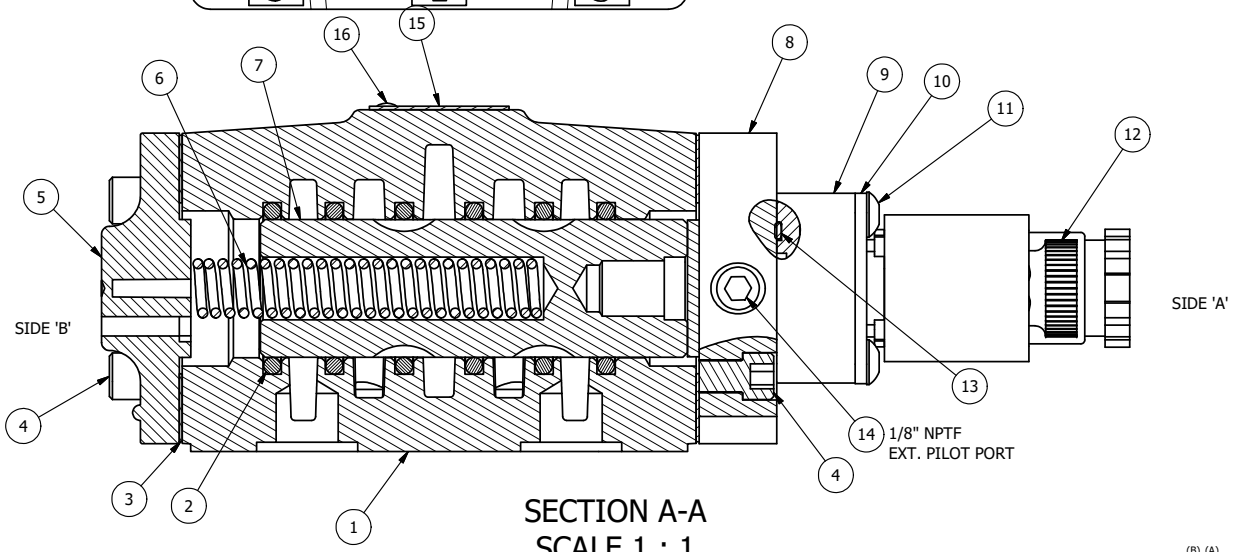

SECTION A-A
SCALE 1 : 1
VIEW FROM 3 PORT SIDE

FLG	QTY	PART NO	DESCRIPTION
16	2	V-212	SCREW, #2 X 3/16 DRIVE, TYPE U, OVAL HEAD, STAINLESS STEEL
15	1	AN-114	NAMEPLATE, BLANK, FOR VALVES WITH SPRINGS OR DETENTS
14	1	V-19	PLUG, SOCKET PIPE 1/8" NPT (#601-3 PITTSBURG PLUG PART #.)
13	1	EMG3	GASKET - END MOUNT SOLENOID, BUNA-N, 1/4" & 3/8" VALVES
12	1	V-567W	E SERIES SINTERED BRONZE MUFFLER, DUST EXCLUDER, V-613 LOCK WASHER
11	4	V-584	SCREW, 10-24 X 1, BUTTON HEAD SOCKET CAP WITH MICROSPHERE APPLIED TO THREADS.
10	1	SEC3-7	PLATE, RE-INFORCEMENT, SOLENOID, STAMPED, 304 STAINLESS
9	1	V-564	SYSTEM 8 INTRINSICALLY SAFE SOLENOID OPERATOR.
8	1	SSA48-1E	ADAPTOR, END MNT SOLENOID, 1/2", 3/4" & 1" VALVE
7	1	S4	SPOOL - STANDARD, 2 POS, CLSD CTR, 1/2" VALVE
6	1	CS4	SPRING - RETURN, 1/2" VALVES
5	1	PEC48-3	END CAP, VENTED, 380 AL, 1/2", 3/4" & 1" VALVES
4	8	V-46	SCREW, 1/4-20 X 3/4, SOCKET HEAD CAP
3	2	ECG48	GASKET - END CAP, 1/2", 3/4" & 1" VALVE
2	6	V-6	O-RING, BUNA-N, 70 DURO, AS-216, (REF 1-1/8 X 1-3/8 X 1/8), 1/2" VALVES, 1" SUBPLATE
1	1	BP4-1	BODY, 1/2" SUBPLATE, UPPER PILOTS, ANODIZED

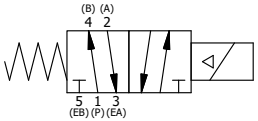

LIMITS ON DIMENSIONS UNLESS OTHERWISE SPECIFIED
2-PL DECIMAL ± .01
3-PL DECIMAL ± .005
FRACTIONAL ± 1/64
ANGULAR ± 1/2'

AAA PRODUCTS INTERNATIONAL
7114 Harry Hines Blvd
Dallas, TX 75235

DRAWN: RMcKenna	DATE: 4/12/2016	CHECKED: KWaite	DATE: 4/12/2016
SCALE: 1 : 1	SHEET: 1 OF 1	RELEASED: HWomack	DATE: 4/12/2016

TITLE:
1/2" SUBPLATE, SNGL SOL, 2 POS, SPR RTRN, INTRINSICALLY SAFE, 24VDC, DUST EXCLDR

PART NO.: ESO4PAL 24VDC

REV.:

THE INFORMATION CONTAINED WITHIN THIS DOCUMENT IS PROPRIETARY TO AAA PRODUCTS AND MAY NOT BE DISCLOSED WITHOUT PRIOR WRITTEN CONSENT

D:\Engineering\Product\Valve\Assembly\Standard\ESO\DWG\ESO4PAL 24VDC.dw